Fibreglass Scaffolds and Ladders

SCAFFOLD COMPONENTS

Fibreglass Scaffolds and Ladders

NARROW WIDTH 29'' (0.736m)

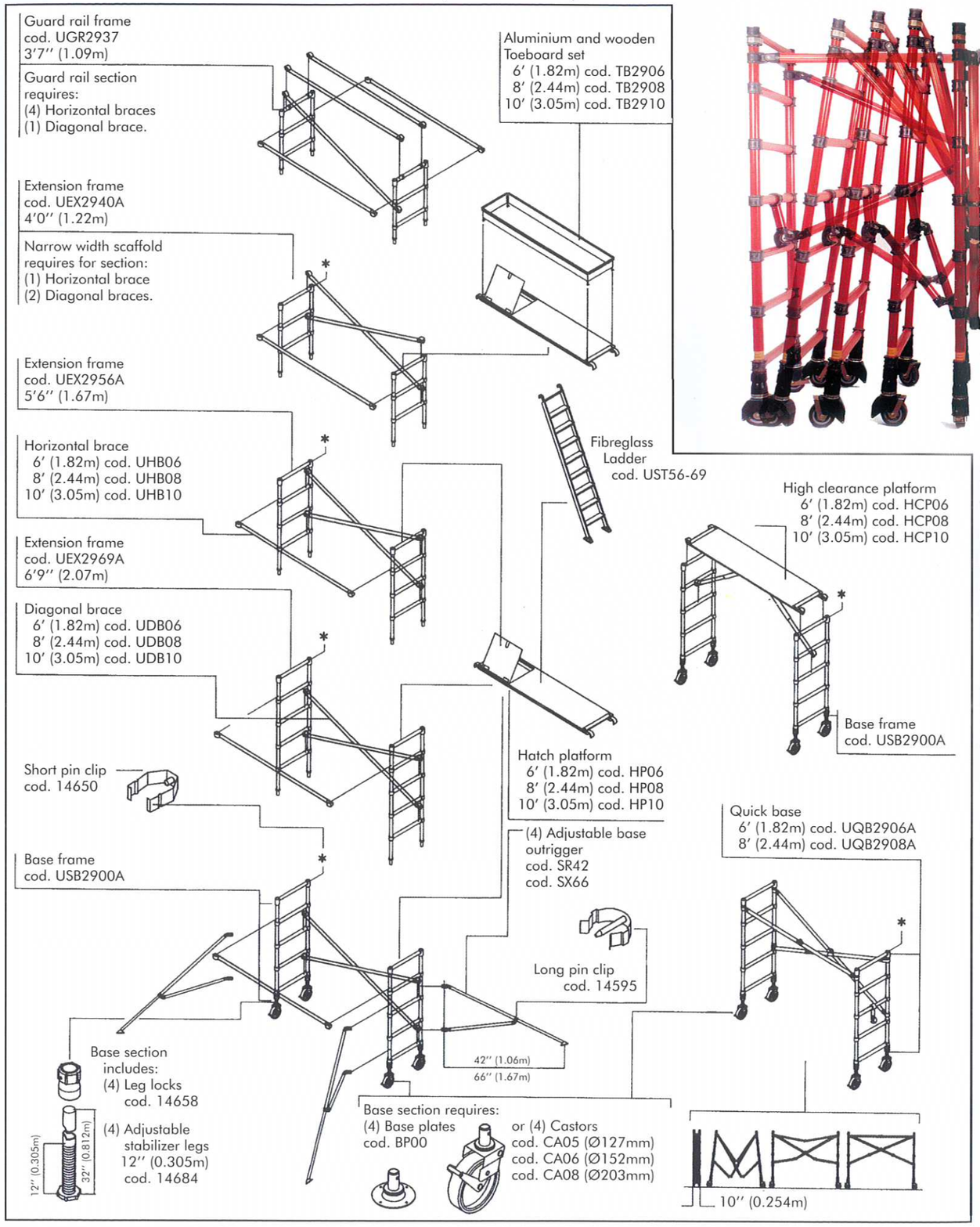

COUPLERS

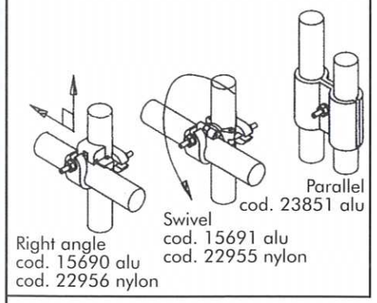
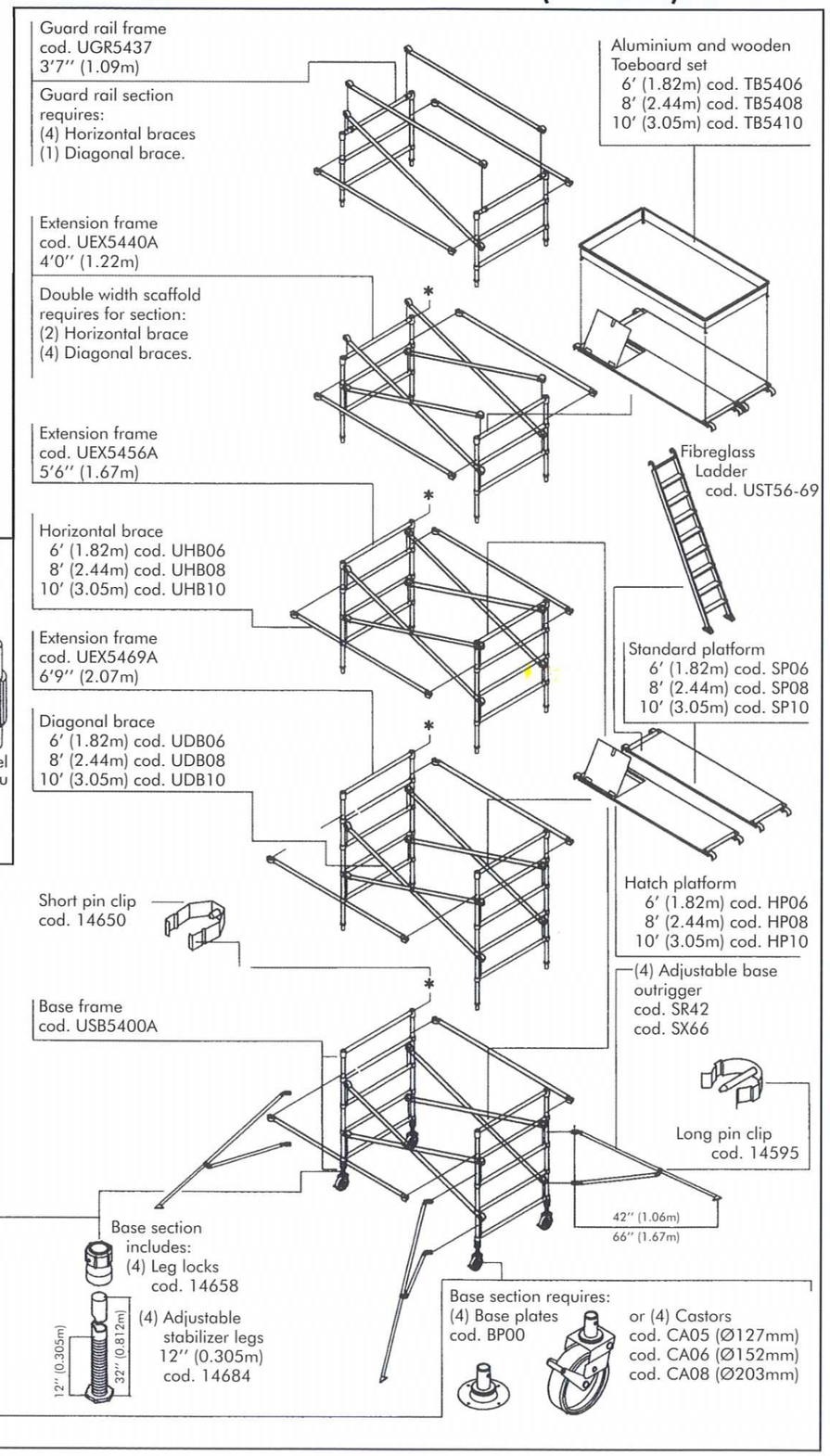
DOUBLE WIDTH 54'' (1.37m)